23m | IP40 | 1W LED | Colour

LBOARD A200 RIVA WM/DM

MADE in GERMANY

Exit luminaire EN IEC 60598-1/2-22, EN 1838, DIN 4844-1.
One-sided exit luminaire in white made of sheet steel for dynamic escape route guidance.
The luminaire will be delivered as universal construction and can be used for ceiling or wall parallel mounting by using an optional wall adapter.
The pictogram of the luminaire is able to indicate two different states (evacuation and blocking).
An evacuation arrow direction (one-sided) can always be selected and must be specified separately when ordering.
The blocking symbol is an integral part of the disc and therefore cannot be deselected.

Technical specifications

Luminaire type	**Luminaires for central battery systems**
Illuminant	1 W LED-bar
Visibility distance	23 m
Luminance	DIN 4844-1 > 500 cd/m²
Connecting terminals	3 x 2.5 mm² for double assignment
Connecting terminals RIVA	2 x 1.5 mm² for double assignment
Colour	white
Material	Sheet steel
Mounting type	Wall-/ceiling mounting
Additional mounting types*	wall bracket mounting, Ceiling mounting (wire suspension), Pendulum mounting
Dimensions (W x H x D)	DM 274 x 213 x 46 mm WM 274 x 237 x 48 mm
Pane dimensions (W x H x D)	248 x 148 x 10 mm
Protection class	IP40
Safety class	I
IK Safety class	IK03
Light current (mains)	130 lm
Power consumption	4.5 VA
Battery current input	11 mA
Voltage supply	230V 50/60Hz; 220V DC +25/-20%
Temperature range	-10°C to +40°C
optional	
Multi-switch and monitoring module	ELC MSÜ3 SET009 SET010

* Optional accessory required

Ceiling mounting

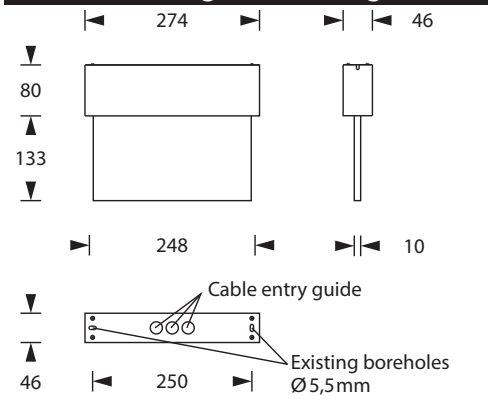

Wall mounting

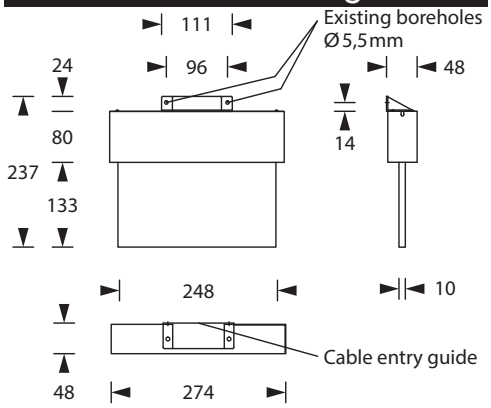

Technical changes reserved / 17.10.2026

Pictograms to choose from - please specify when ordering

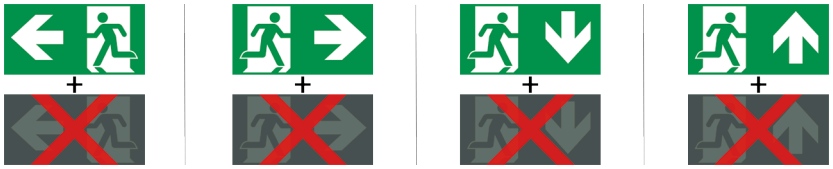

Accessories

Wire guard
Cable surface mounting set
Chain assembly set
Central pendulum - Aluminum/Plastic
Cable assembly set
Wall bracket
Wall adapter
Pictograms

The DSZ enables dynamic escape routing (DFWL). The DSZ is used for evacuation from a dangerous area into a safe area.

Escape route clear

Escape route blocked

The escape and rescue route is blocked with a red "**X**", whereby the escape sign is not backlit. Different operating modes can be set on the DSZ, for example a static or flashing red "**X**".

Modes of operation:

How can RIVA luminaires block escape/rescue routes in conjunction with a fire alarm system?

Normal state: No danger ⇒ All routes unblocked

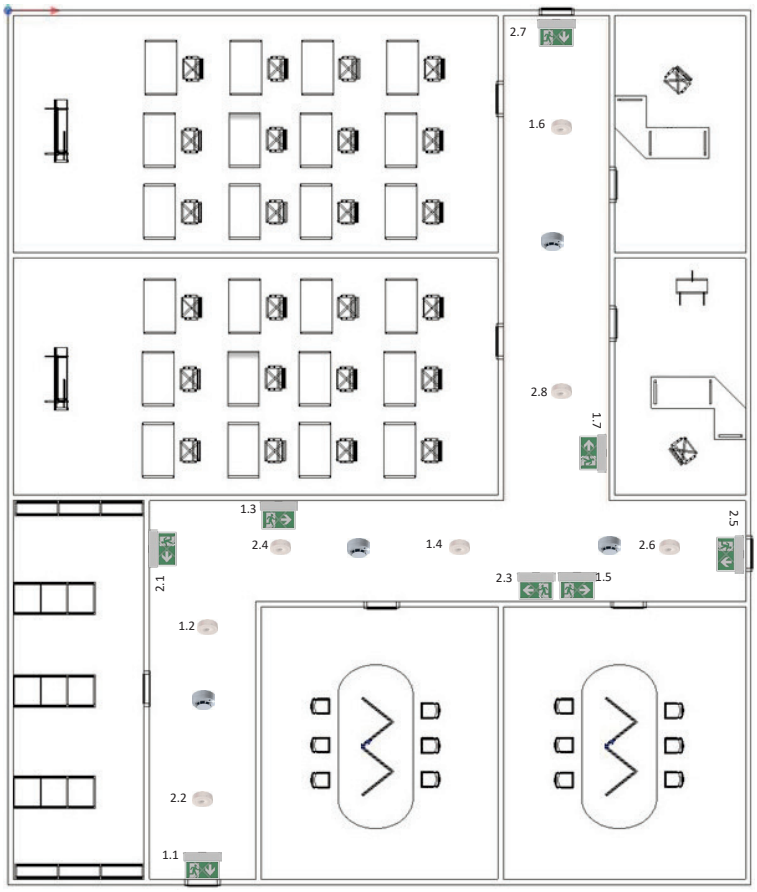

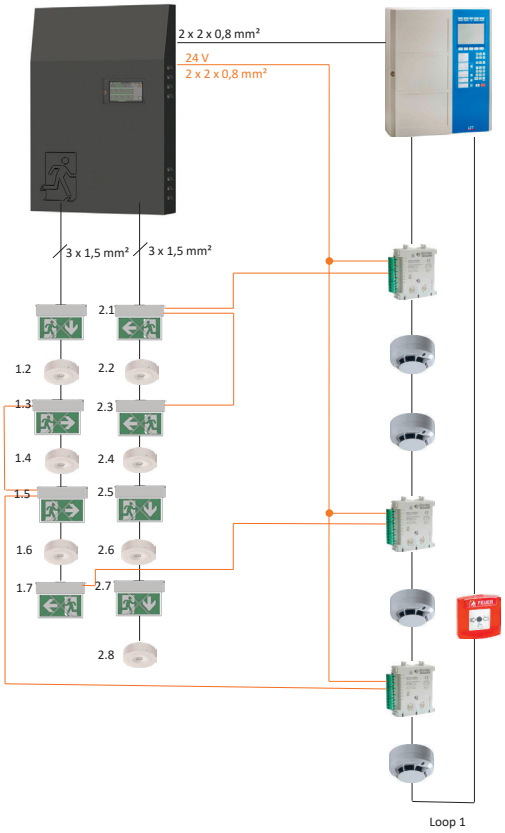

Technical changes reserved / 17.10.2026

Scenario 1: Fire in area A ⇒ Fire alarm system gives control signal to rescue signs 2.1 and 2.3 and blocks (red **X**) so that no persons run into or through the dangerous area

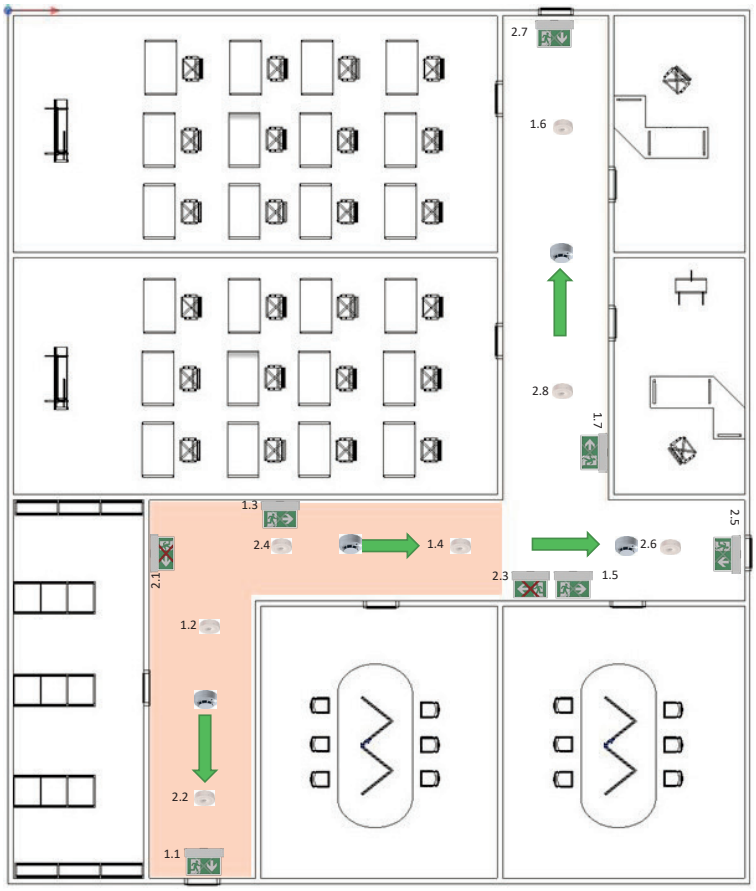

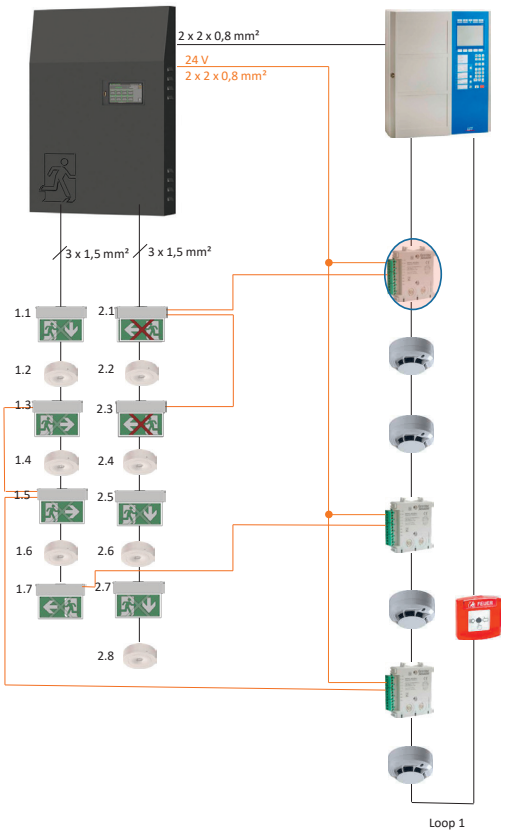

Scenario 2: Fire in area B ⇒ Fire alarm system gives control signal to rescue sign 1.7 and locks (red **X**) so that no persons can run into the dangerous area

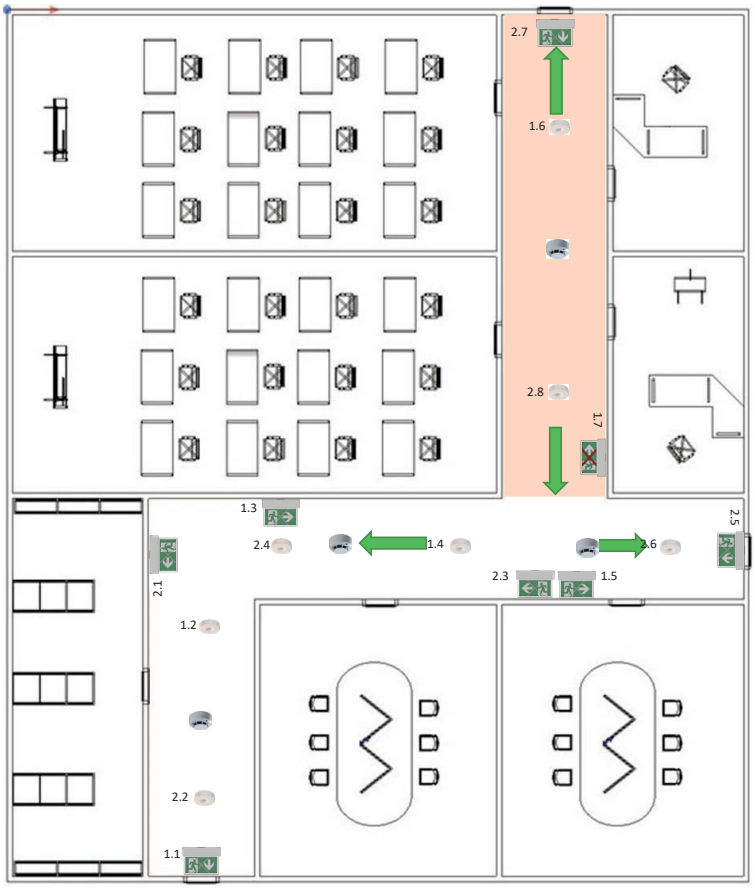

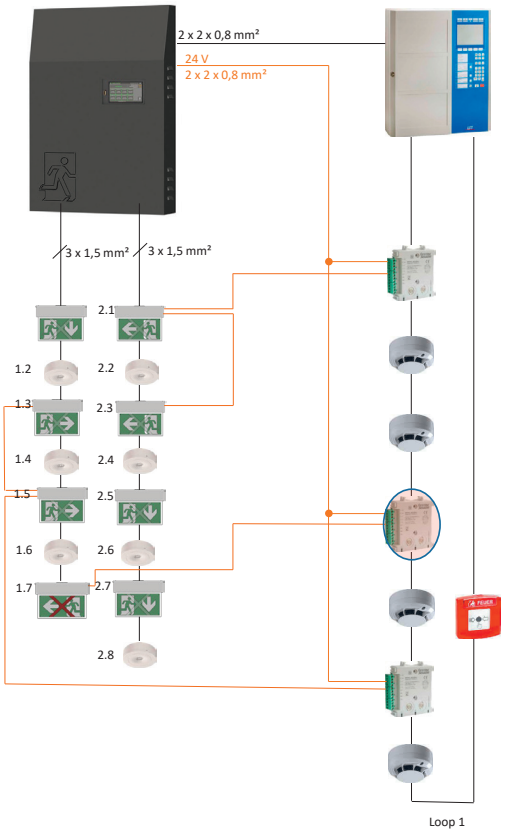

Scenario 3: Fire in area C ⇒ Fire alarm system gives control signal to escape signs 1.3 and 1.5 and blocks (red **X**) so that no people run into or through the dangerous area

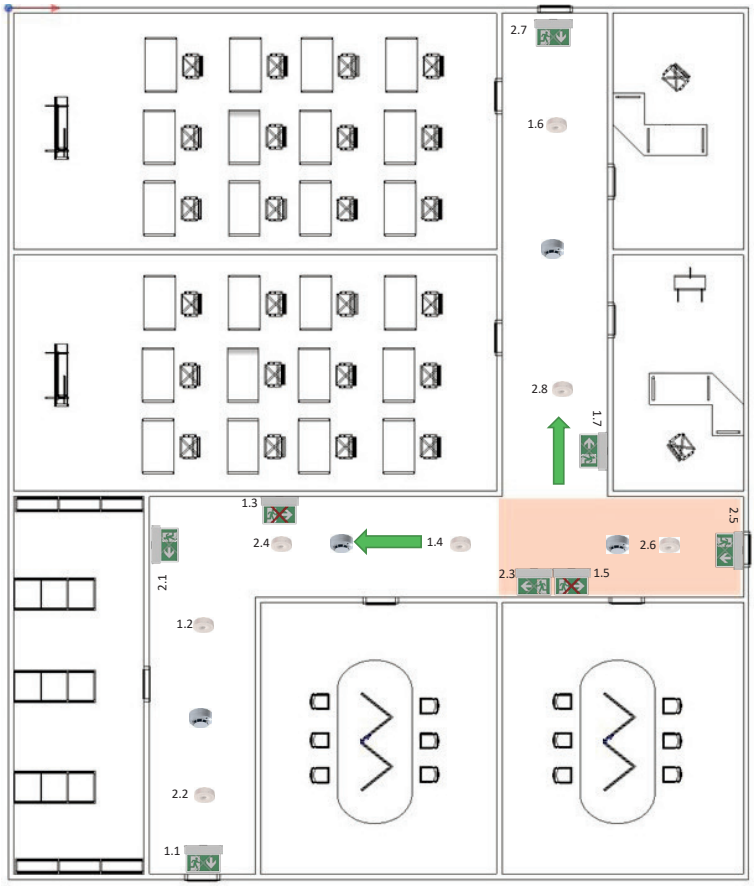

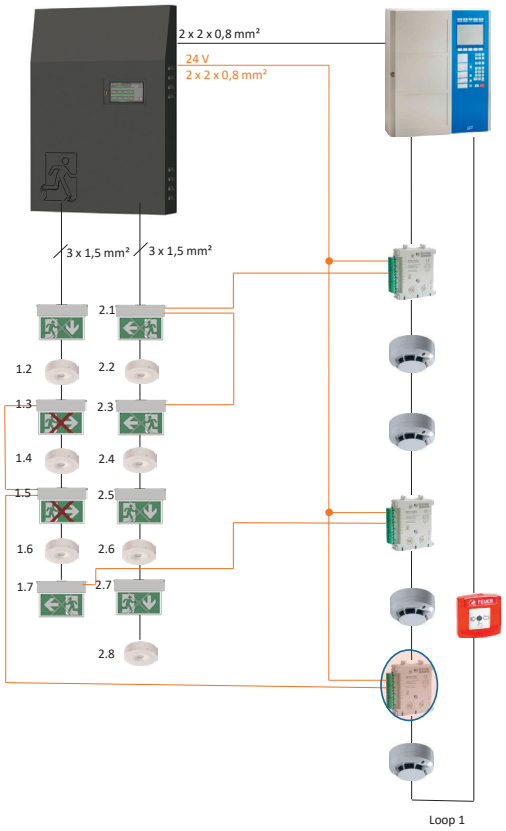

Connection diagram (example): RIVA luminaires in connection with fire alarm system and CPS/LPS

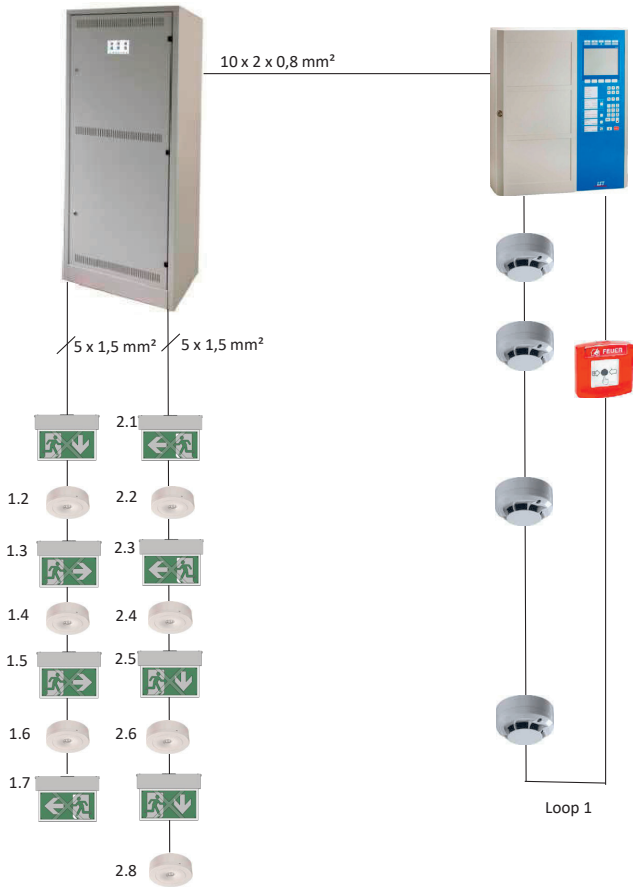

NOTE:
The exact wiring diagram must be requested from the manufacturer of the fire alarm system or CPS / LPS-System