60m | IP65 | 2x3W LED | Colour

S-LINE 600 UM

Exit luminaire EN IEC 60598-1/2-22, EN 1838, DIN 4844-1.
Very slim, robust polycarbonate housing with an easy-to-use locking mechanism. Can be used for wall or ceiling mounting. Pre-stamped mounting and cable entry openings from top or rear. For wall mounting, an unobtrusive wall adapter with click system is included.
The 10 mm light deflecting pane is illuminated with 2x 3 watt LED-bars and a pictogram set - arrow left/right/down/up/blind (Visibility distance 60 m) is included.



Technical specifications

Luminaire type	Luminaires for central battery systems	Self contained luminaires
Illuminant	2 x 3 W LED-bar	2 x 3 W LED-bar
Visibility distance	60 m	
Luminance	DIN 4844-1 > 500 cd/m²	
Connecting terminals	2 x 2.5 mm² for double assignment	
Colour	white	
Material	Polycarbonate	
Light color	6500K	
Mounting type	Wall-/ceiling mounting	
Dimensions (W x H x D)	DM 660 x 383 x 75 mm WM 660 x 396 x 83 mm	
Protection class	IP65	
Safety class	II	
IK Safety class	IK03	
Light current (mains)	930 lm	930 lm
Luminous flux Emergency (DC) / mains		
Battery duration 1h	–	16% / 100%
Battery duration 3h	–	16% / 100%
Battery duration 8h	–	10% / 100%
Power consumption	15 VA	18.7 VA
Battery current input	41 mA	–
Battery duration Battery operation	–	1h / 3h / 8h
Voltage supply	230V 50/60Hz; 220V DC +25/-20%	230V 50/60Hz
NiMH-battery		
Battery duration 1h	–	4,8V 2,0Ah
Battery duration 3h	–	4,8V 2,0Ah
Battery duration 8h	–	4,8V 2,0Ah
Temperature range	-10°C to +40°C	–
Non-maintained mode	–	0°C to +35°C
Maintained mode	–	-5°C to +30°C
optional		
Multi-switch and monitoring module	ELC MSÜ3 SET009 SET010/025	–
Self monitoring	–	SELF CHECK
Central monitoring	–	SAFELOG Line
Wireless monitoring	–	SAFELOG Wireless

Ceiling mounting

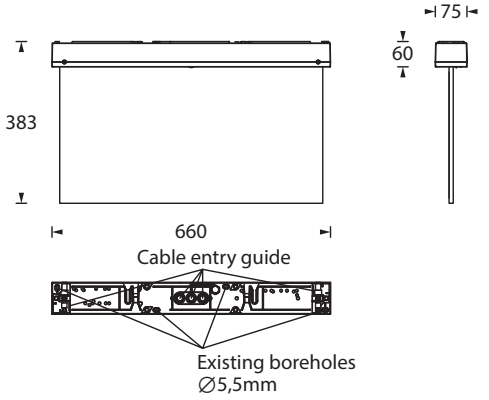

Wall mounting

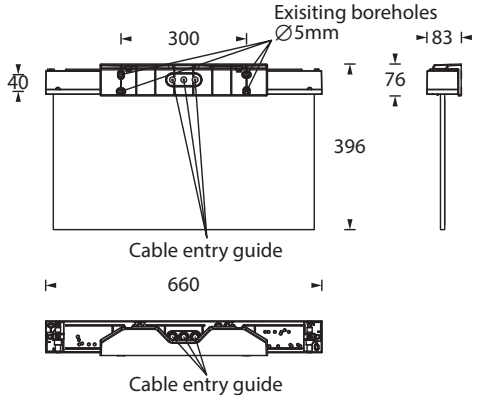

Technical changes reserved / 22.11.2026

Pictogram-set - included in the delivery



Accessories

Wire guard