23m | IP40 | 1W LED | 2W LED | Colour

LBOARD E200-S DE

MADE in GERMANY

Exit luminaire EN IEC 60598-1/2-22, EN 1838, DIN 4844-1.
Housing made from steel sheeting, powder coated in white.
Available for recessed ceiling mounting with 10 mm thick light-deflecting pane and replaceable pictograms.
The luminaire price includes per luminaire one pictogramfoil set - arrow left/right/down/up/blind (Visibility distance 23 m).
Optionally available with 1 or 2 Watt LED-bar.



Technical specifications

Luminaire type	Luminaires for central battery systems		Self contained luminaires	
Illuminant	1 W LED-bar	2 W LED-bar	1 W LED-bar	2 W LED-bar
Visibility distance	23 m			
Luminance	DIN 4844-1 > 500 cd/m²			
Connecting terminals	3 x 2.5 mm² for double assignment			
Colour	white			
Material	Sheet steel			
Light color	6500K			
Mounting type	Recessed mounting			
Dimensions (W x H x D)	DE 325 x 201 x 74 mm			
Pane dimensions (W x H x D)	248 x 148 x 10 mm			
Dimensions ceiling cutout (L x W)	min. 310 x 62 mm / max. 314 x 65 mm			
Installation depth	97 mm			
Protection class	IP40			
Safety class	I			
IK Safety class	IK03			
Light current (mains)	130 lm	260 lm	130 lm	260 lm
Luminous flux Emergency (DC) / mains				
Battery duration 1h	–	–	50% / 100%	30% / 100%
Battery duration 3h	–	–	50% / 100%	30% / 100%
Battery duration 8h	–	–	25% / 100%	15% / 100%
Power consumption	4.5 VA	5.5 VA	4.5 VA	5.5 VA
Battery current input	11 mA	14 mA	–	
Battery duration Battery operation	–		1h / 3h / 8h	
Voltage supply	230V 50/60Hz; 220V DC +25/-20%		230V 50/60Hz	
NiMH-battery				
Battery duration 1h	–	–	4,8V 0,8Ah	4,8V 0,8Ah
Battery duration 3h	–	–	4,8V 0,8Ah	4,8V 0,8Ah
Battery duration 8h	–	–	4,8V 0,8Ah	4,8V 0,8Ah
Temperature range	-10°C to +40°C		–	
Non-maintained mode	–		0°C to +35°C	
Maintained mode	–		-5°C to +30°C	
optional				
Multi-switch and monitoring module	DALI ELC MSÜ3 SET009 SET010		–	
Self monitoring	–		SELF CHECK	
Central monitoring	–		SAFELOG Line	
Wireless monitoring	–		SAFELOG Wireless	

Recessed mounting

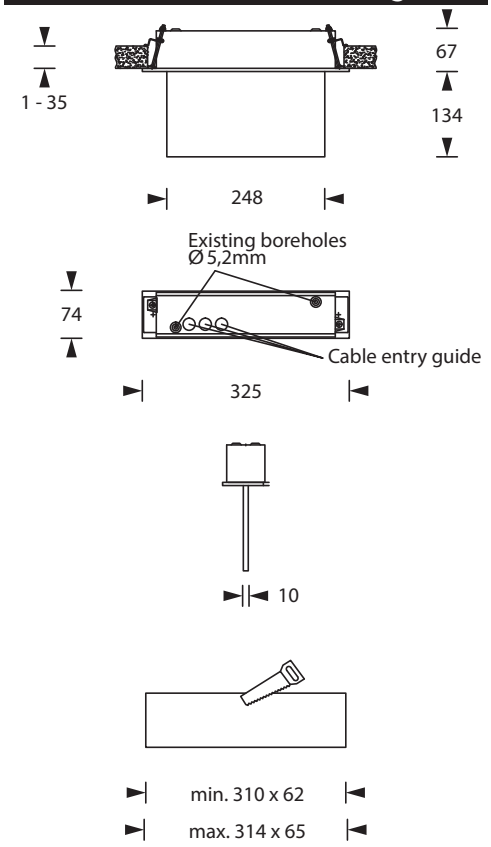

Technical changes reserved / 22.11.2026

Pictogram-set - included in the delivery



Optional pictograms (-sets)



Accessories

Cement assembly box
Pictograms