23m | IP40 | 1W LED | 2W LED | Colour

# E-LINE 200 DES

**Exit luminaire EN IEC 60598-1/2-22, EN 1838, DIN 4844-1.**
Simple IP40 exit luminaire made of polycarbonate for recessed mounting with wire suspension (wire length 1,5 m) in white or black. Optionally, the luminaire is available from the factory with a 2 x 5 m or a 2 x 10 m live cable. The 8 mm PC/acrylic glass pane module is illuminated by a 1 or 2 Watt LED-bar. A set of pictograms - arrow left/ right/down/up/blind (Visibility distance 23 m) is included.



## Technical specifications

| **Luminaire type** | **Luminaires for central battery systems** | | **Self contained luminaires** | |
|---|---|---|---|---|
| Illuminant | 1 W LED-bar | 2 W LED-bar | 1 W LED-bar | 2 W LED-bar |
| Visibility distance | 23 m | | | |
| Luminance | DIN 4844-1 > 500 cd/m² | | | |
| Connecting terminals | 2 x 2.5 mm² for double assignment | | | |
| Colour | white / black | | | |
| Material | Polycarbonate | | | |
| Light color | 6500K | | | |
| Mounting type | Recessed mounting (wire suspension) | | | |
| Additional mounting types* | Wall-/ceiling mounting (wire suspension) | | | |
| Dimensions (W x H x D) | DES 308 x 240 x 77 mm | | | |
| Pane dimensions (W x H x D) | 245 x 149 x 8 mm | | | |
| Dimensions ceiling cutout (L x W) | min. 270 x 60 mm / max. 285 x 65 mm | | | |
| Installation depth | 94 mm | | | |
| Protection class | IP40 | | | |
| Safety class | II | | | |
| IK Safety class | IK03 | | | |
| Light current (mains) | 130 lm | 260 lm | 130 lm | 260 lm |
| Luminous flux Emergency (DC) / mains | | | | |
| Battery duration 1h | – | – | 50% / 100% | 30% / 100% |
| Battery duration 3h | – | – | 50% / 100% | 30% / 100% |
| Battery duration 8h | – | – | 25% / 100% | 15% / 100% |
| Power consumption | 4.5 VA | 5.5 VA | 4.5 VA | 5.5 VA |
| Battery current input | 11 mA | 14 mA | – | |
| Battery duration Battery operation | – | | 1h / 3h / 8h | |
| Voltage supply | 230V 50/60Hz; 220V DC +25/-20% | | 230V 50/60Hz | |
| NiMH-battery | | | | |
| Battery duration 1h | – | – | 4,8V 0,8Ah | 4,8V 0,8Ah |
| Battery duration 3h | – | – | 4,8V 0,8Ah | 4,8V 0,8Ah |
| Battery duration 8h | – | – | 4,8V 0,8Ah | 4,8V 0,8Ah |
| Temperature range | -10°C to +40°C | | – | |
| Non-maintained mode | – | | 0°C to +35°C | |
| Maintained mode | – | | -5°C to +30°C | |
| optional | | | | |
| Multi-switch and monitoring module | ELC MSÜ3 SET009 SET010 | | – | |
| Self monitoring | – | | SELF CHECK | |
| Central monitoring | – | | SAFELOG Line | |
| Wireless monitoring | – | | SAFELOG Wireless | |

* Optional accessory required

## Recessed mounting (wire suspension)

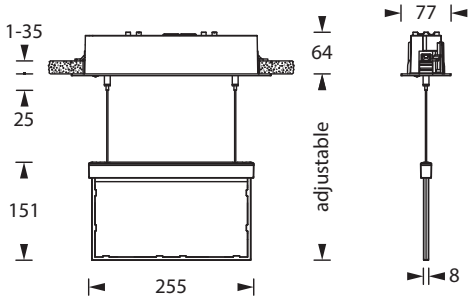


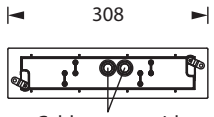


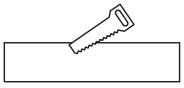

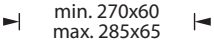




Technical changes reserved / 22.11.2026

## Pictogram-set - included in the delivery



## Optional pictograms (-sets)



## Accessories

| |
|---|
| Ceiling mounting set - E-LINE |
| Pictograms |