IK10 | IP65 | 2x3W LED | Colour

SBOX V2A 170 BEL-2F-PG

MADE in GERMANY

Safety luminaire in compliance with EN IEC 60598-1/2-22 and EN 1838.
Very robust safety luminaire with optics for area illumination made of brushed stainless steel (V2A) for wall or ceiling mounting. The luminaire is equipped with an IP65 membrane pressure compensation valve and a pane of 8 mm toughened safety glass as standard.



Technical specifications

Luminaire type	Luminaires for central battery systems	Self contained luminaires
Illuminant	2 x 3 W LED	2 x 3 W LED
Connecting terminals	3 x 2.5 mm² for double assignment	
Colour	Stainless steel brushed	
Material	Stainless steel (V2A)	
Light color	6500K	
Mounting type	Ceiling mounting	
Dimensions (W x H x D)	DM 172 x 194 x 72 mm	
Protection class	IP65	
Safety class	I	
IK Safety class	IK10	
Light current (mains)	640 lm	480 lm
Light current (emergency)		
Battery duration 1h	–	640 lm
Battery duration 3h	–	300 lm
Battery duration 8h	–	130 lm
Luminous flux Emergency (DC) / mains		
Battery duration 1h	–	130% / 100%
Battery duration 3h	–	60% / 100%
Battery duration 8h	–	30% / 100%
Power consumption	7.6 VA	13.7 VA
Battery current input	22 mA	–
Battery duration Battery operation	–	1h / 3h / 8h
Voltage supply	230V 50/60Hz; 220V DC +25/-20%	230V 50/60Hz
NiMH-battery		
Battery duration 1h	–	4,8V 2,0Ah
Battery duration 3h	–	4,8V 2,0Ah
Battery duration 8h	–	4,8V 2,0Ah
Temperature range	-10°C to +40°C	–
Non-maintained mode	–	0°C to +35°C
Maintained mode	–	-10°C to +40°C
optional		
Multi-switch and monitoring module	ELC MSÜ3 SET009 SET010/025	–
Self monitoring	–	SELF CHECK
Central monitoring	–	SAFELOG Line
Wireless monitoring	–	SAFELOG Wireless

Ceiling mounting

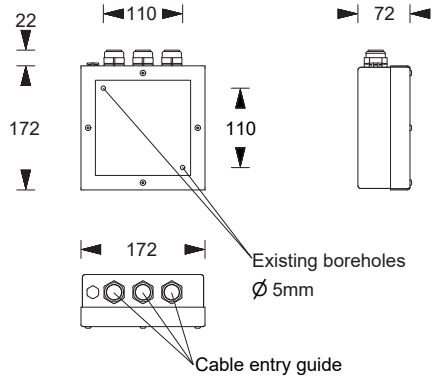

Accessories

Pole and wall bracket

Technical changes reserved / 22.11.2026

Lighting data and tables of luminaire distances (E = 1,25 lx)

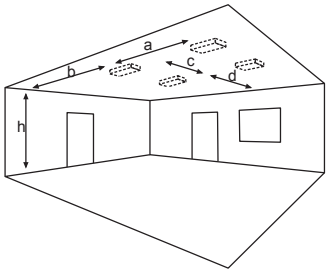

Ceiling mounting

Luminaires for central battery systems **Wide area illumination**

Distance table for plane emergency routes / distance data in meters

Illuminant: 2 x 3W LED

Luminous flux emergency / mains: 640lm

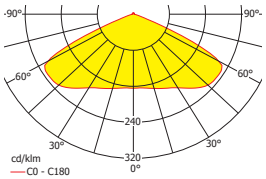

h	2.50	3.00	3.50	4.00	4.50	5.00	5.50	6.00	6.50	7.00	7.50	8.00	8.50	9.00
a	11.60	13.30	14.80	16.10	17.30	18.10	18.70	19.00	19.10	19.10	19.00	18.90	18.60	18.10
b	5.30	5.90	6.40	6.70	6.80	6.80	6.70	6.60	6.30	5.90	5.30	4.40	3.50	1.80
c	11.60	13.30	14.80	16.10	17.30	18.10	18.70	19.00	19.10	19.10	19.00	18.90	18.60	18.10
d	5.30	5.90	6.40	6.70	6.80	6.80	6.70	6.60	6.30	5.90	5.30	4.40	3.50	1.80

Self contained luminaires **Wide area illumination**

Distance table for plane emergency routes / distance data in meters

Illuminant: 2 x 3W LED

Luminous flux emergency / mains: 640lm/480lm – **Battery duration: 1h**

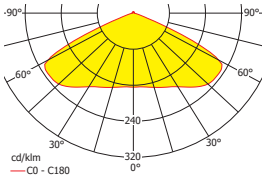

h	2.50	3.00	3.50	4.00	4.50	5.00	5.50	6.00	6.50	7.00	7.50	8.00	8.50	9.00
a	11.60	13.30	14.80	16.10	17.30	18.10	18.70	19.00	19.10	19.10	19.00	18.90	18.60	18.10
b	5.30	5.90	6.40	6.70	6.80	6.80	6.70	6.60	6.30	5.90	5.30	4.40	3.50	1.80
c	11.60	13.30	14.80	16.10	17.30	18.10	18.70	19.00	19.10	19.10	19.00	18.90	18.60	18.10
d	5.30	5.90	6.40	6.70	6.80	6.80	6.70	6.60	6.30	5.90	5.30	4.40	3.50	1.80

Self contained luminaires **Wide area illumination**

Distance table for plane emergency routes / distance data in meters

Illuminant: 2 x 3W LED

Luminous flux emergency / mains: 300lm/480lm – **Battery duration: 3h**

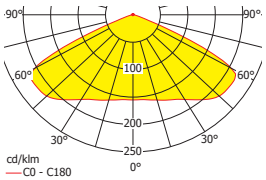

h	2.50	3.00	3.50	4.00	4.50	5.00	5.50	6.00
a	10.30	11.60	12.30	12.70	12.70	12.70	12.50	12.10
b	4.40	4.50	4.50	4.40	4.10	3.50	2.60	1.10
c	10.30	11.60	12.30	12.70	12.70	12.70	12.50	12.10
d	4.40	4.50	4.50	4.40	4.10	3.50	2.60	1.10

Self contained luminaires **Wide area illumination**

Distance table for plane emergency routes / distance data in meters

Illuminant: 2 x 3W LED

Luminous flux emergency / mains: 130lm/480lm – **Battery duration: 8h**

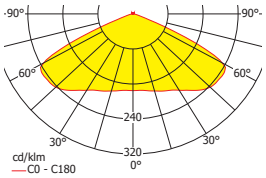

h	2.50	3.00	3.50	4.00
a	8.70	8.90	8.80	8.60
b	3.10	3.00	2.40	1.50
c	8.70	8.90	8.80	8.60
d	3.10	3.00	2.40	1.50