Chain assembly set

The chain mounting set consists of 2 resp. 4 chain eyes (depending on the version) for attaching chains to the luminaire. The chain mounting set must be ordered separately as an accessory.
Note: A chain is not included in the scope of delivery.

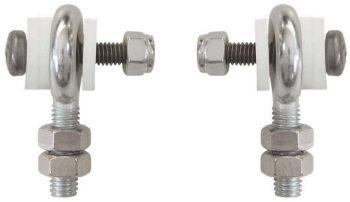

Figure shows item number: 551001

Technical specifications and order information

Chain assembly set

Material	Stainless steel/screw galvanised
Dimensions (W x H x D)	19 x 24 x 12.5 mm
Dimensions screws	M4 x 10 mm
Dimensions eylets (Ø)	5.6 mm (inside) / 12.5 mm (outside)

Order number **551001**

Suitable for following luminaires:

ABOX 200 UM	L-PLAST 200 UM-BEL	SAFE D-2R
ABOX 300 UM	L-PLAST 250 BEL WM/DM	SAFE D-2T
ABOX 400 UM	L-PLAST 250 BEL-R DM	SAFE D-4F
ABOX 600 UM	L-PLAST 250 BEL-R-90 DM	SAFE D-4R
COMPACT 200 UM	L-PLAST 250-M UM	SAFE D-4T
COMPACT 300 UM	L-PLAST 250-T UM	SAFE D-8F
E-LINE 200 UM	L-PLAST 300 UM	SAFE D-8R
E-LINE 300 UM	LBOARD A200 RIVA WM/DM	SAFE D-8T
H-LINE 200 UM	LBOARD A200 WM/DM	SAFE MINI D-F
IMPACT A-2F-IP54	LBOARD A300 RIVA WM/DM	SAFE MINI D-R
IMPACT A-2F-IP65	LBOARD A300 WM/DM	SAFE MINI D-T
IMPACT A-2R-IP54	LBOX 300 DM	SMARTLINE A200 DM
IMPACT A-2R-IP65	PROTECT PD UM	SMARTLINE A300 DM
IMPACT A-2T-IP54	S-LINE 200 BEL WM/DM	SMARTLUX 200 DM
IMPACT A-2T-IP65	S-LINE 200 BEL-R DM	SMARTLUX 200 TWIN 5lx DM
KBOX 200 UM	S-LINE 200 BEL-R-90 DM	SMARTLUX 200 TWIN DM
KBOX 300 UM	S-LINE 200 UM	SMARTLUX 300 DM
KBOX 400 UM	S-LINE 300 UM	SMARTLUX 300 TWIN 5lx DM
L-PLAST 200 UM	SAFE D-2F	SMARTLUX 300 TWIN DM

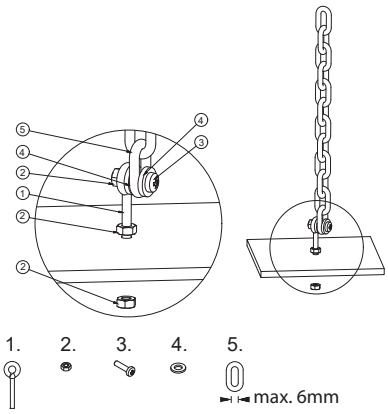

Chain assembly set CUBE

Material	Stainless steel/screw galvanised
Dimensions (W x H x D)	18.8 x 39.5 x 12.5 mm
Dimensions screws	M4 x 25 mm
Dimensions eylets (Ø)	5.6 mm (inside) / 12.5 mm (outside)

Order number **551016**

Suitable for following luminaires:

CUBE H-300	CUBE L-300	CUBE L-450
CUBE H-600	CUBE L-400	CUBE W-300

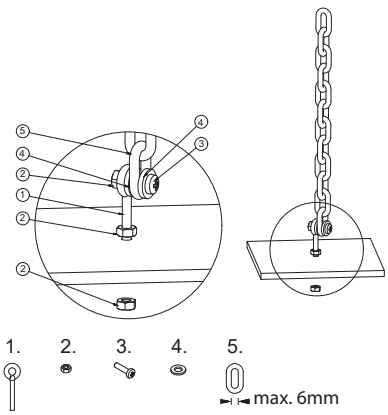

Technical changes reserved / 22.11.2026

Chain assembly set LBOX 200

Material	Stainless steel/screw galvanised
Dimensions (W x H x D)	22.6 x 33 x 16.4 mm
Dimensions screws	M5 x 15 mm
Dimensions eylets (Ø)	8 mm (inside) / 16.4 mm (outside)

Order number **551024**

Suitable for following luminaires:
LBOX 200 DM

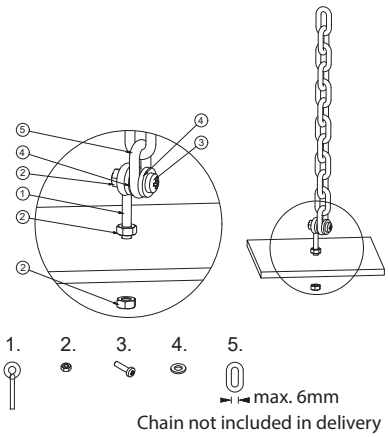

Technical changes reserved / 22.11.2026