23m | IP40 | 1W LED | 2W LED | Colour

E-LINE 200 DMS

MADE in GERMANY

Exit luminaire EN IEC 60598-1/2-22, EN 1838, DIN 4844-1.
Simple IP40 exit luminaire made of polycarbonate for wall/ceiling mounting with wire suspension (wire length 1,5 m) in white or black. An inconspicuous wall adapter with click system is included for wall mounting. Optionally, the luminaire is available from the factory with a 2 x 5 m or a 2 x 10 m live cable. The 8 mm PC/acrylic glass pane module is illuminated by a 1 or 2 Watt LED-bar. A set of pictograms - arrow left/right/down/up/blind (Visibility distance 23 m) is included.



Technical specifications

Luminaire type	**Luminaires for central battery systems**		**Self contained luminaires**	
Illuminant	1 W LED-bar	2 W LED-bar	1 W LED-bar	2 W LED-bar
Visibility distance	23 m			
Luminance	DIN 4844-1 > 500 cd/m²			
Connecting terminals	2 x 2.5 mm² for double assignment			
Colour	white / black			
Material	Polycarbonate			
Light color	6500K			
Mounting type	Wall-/ceiling mounting (wire suspension)			
Additional mounting types*	Recessed mounting (wire suspension)			
Dimensions (W x H x D)	DM 268 x 239 x 50 mm WM 268 x 242 x 54 mm			
Pane dimensions (W x H x D)	245 x 149 x 8 mm			
Protection class	IP40			
Safety class	II			
IK Safety class	IK03			
Light current (mains)	130 lm	260 lm	130 lm	260 lm
Luminous flux Emergency (DC) / mains				
Battery duration 1h	–	–	50% / 100%	30% / 100%
Battery duration 3h	–	–	50% / 100%	30% / 100%
Battery duration 8h	–	–	25% / 100%	15% / 100%
Power consumption	4.5 VA	5.5 VA	4.5 VA	5.5 VA
Battery current input	11 mA	14 mA	–	
Battery duration Battery operation	–		1h / 3h / 8h	
Voltage supply	230V 50/60Hz; 220V DC +25/-20%		230V 50/60Hz	
NiMH-battery				
Battery duration 1h	–	–	4,8V 0,8Ah	4,8V 0,8Ah
Battery duration 3h	–	–	4,8V 0,8Ah	4,8V 0,8Ah
Battery duration 8h	–	–	4,8V 0,8Ah	4,8V 0,8Ah
Temperature range	-10°C to +40°C		–	
Non-maintained mode	–		0°C to +35°C	
Maintained mode	–		-5°C to +30°C	
optional				
Multi-switch and monitoring module	ELC MSÜ3 SET009 SET010		–	
Self monitoring	–		SELF CHECK	
Central monitoring	–		SAFELOG Line	
Wireless monitoring	–		SAFELOG Wireless	

* Optional accessory required

Ceiling mounting (wire suspension)

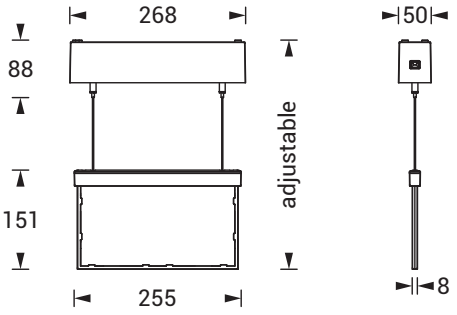

Wall mounting (wire suspension)

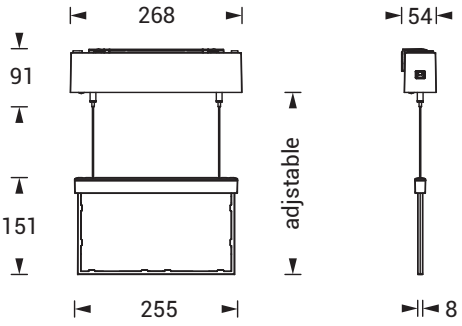

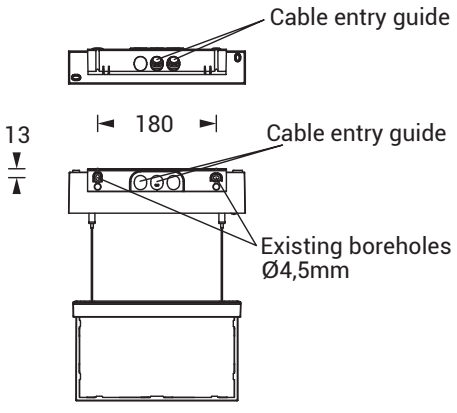

Technical changes reserved / 22.11.2026

Pictogram-set - included in the delivery



Optional pictograms (-sets)



Accessories

Recessed ceiling housing - E-LINE
Wall bracket
Pictograms