23m | IP54 | 1W LED | 2W LED | Colour

E-LINE 200 DE

MADE in GERMANY

Exit luminaire EN IEC 60598-1/2-22, EN 1838, DIN 4844-1.
Simple IP54 exit luminaire made of polycarbonate for recessed mounting in white or black. The 8 mm PC/acrylic glass pane module is illuminated by a 1 or 2 Watt LED-bar. A set of pictograms - arrow left/right/down/up/blind (Visibility distance 23 m) is included.



Technical specifications

Luminaire type	**Luminaires for central battery systems**		**Self contained luminaires**	
Illuminant	1 W LED-bar	2 W LED-bar	1 W LED-bar	2 W LED-bar
Visibility distance	23 m			
Luminance	DIN 4844-1 > 500 cd/m²			
Connecting terminals	2 x 2.5 mm² for double assignment			
Colour	white / black			
Material	Polycarbonate			
Light color	6500K			
Mounting type	Recessed mounting			
Additional mounting types*	Ceiling mounting, Wall mounting			
Dimensions (W x H x D)	DE 308 x 194 x 77 mm			
Pane dimensions (W x H x D)	245 x 149 x 8 mm			
Dimensions ceiling cutout (L x W)	min. 270 x 60 mm / max. 285 x 65 mm			
Installation depth	94 mm			
Protection class	IP54			
Safety class	II			
IK Safety class	IK03			
Light current (mains)	130 lm	260 lm	130 lm	260 lm
Luminous flux Emergency (DC) / mains				
Battery duration 1h	–	–	50% / 100%	30% / 100%
Battery duration 3h	–	–	50% / 100%	30% / 100%
Battery duration 8h	–	–	25% / 100%	15% / 100%
Power consumption	4.5 VA	5.5 VA	4.5 VA	5.5 VA
Battery current input	11 mA	14 mA	–	
Battery duration Battery operation	–		1h / 3h / 8h	
Voltage supply	230V 50/60Hz; 220V DC +25/-20%		230V 50/60Hz	
NiMH-battery				
Battery duration 1h	–	–	4,8V 0,8Ah	4,8V 0,8Ah
Battery duration 3h	–	–	4,8V 0,8Ah	4,8V 0,8Ah
Battery duration 8h	–	–	4,8V 0,8Ah	4,8V 0,8Ah
Temperature range	-10°C to +40°C		–	
Non-maintained mode	–		0°C to +35°C	
Maintained mode	–		-5°C to +30°C	
optional				
Multi-switch and monitoring module	ELC MSÜ3 SET009 SET010		–	
Self monitoring	–		SELF CHECK	
Central monitoring	–		SAFELOG Line	
Wireless monitoring	–		SAFELOG Wireless	

* Optional accessory required

Recessed mounting

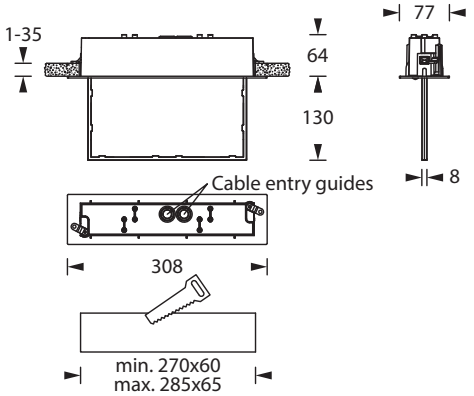

Technical changes reserved / 22.11.2026

Pictogram-set - included in the delivery



Optional pictograms (-sets)



Accessories

Ceiling mounting set - E-LINE
Pictograms

Technical changes reserved / 22.11.2026