IP65 | 3W LED | Colour

BEAM 140-PC A-R

MADE in GERMANY

Safety luminaire in compliance with EN IEC 60598-1/2-22 and EN 1838.
Compact polycarbonate housing in an appealing design with round hollow of the surface. Easy to handle locking mechanism without screws. Version for ceiling mounting with one high-power LED (switching type: non-maintained mode) and cast acrylic optics for escape route illumination by rectangular light deflection characteristic. For unprotected outdoor installation, the luminaire can be optionally equipped with a pressure equalization valve to be installed on site.



Technical specifications

Luminaire type	Luminaires for central battery systems	Self contained luminaires
Illuminant	3 W LED	3 W LED
Connecting terminals	2 x 2.5 mm² for double assignment	
Colour	white	
Material	Polycarbonate	
Light color	6500K	
Mounting type	Ceiling mounting	
Additional mounting types*	Ceiling mounting (wire suspension)	
Dimensions (Ø x H)	DM 145 x 43 mm	
Protection class	IP65	
Safety class	II	
IK Safety class	IK03	
Light current (mains)	280 lm	120 lm
Light current (emergency)		
Battery duration 1h	–	280 lm
Battery duration 3h	–	280 lm
Battery duration 8h	–	120 lm
Luminous flux Emergency (DC) / mains		
Battery duration 1h	–	100% / 45%
Battery duration 3h	–	100% / 45%
Battery duration 8h	–	45% / 45%
Power consumption	6 VA	5 VA
Battery current input	15 mA	–
Battery duration Battery operation	–	1h / 3h / 8h
Voltage supply	230V 50/60Hz; 220V DC +25/-20%	230V 50/60Hz
NiMH-battery		
Battery duration 1h	–	4,8V 2,0Ah 4,8V 2,0Ah + AkH
Battery duration 3h	–	4,8V 2,0Ah 4,8V 2,0Ah + AkH
Battery duration 8h	–	4,8V 2,0Ah 4,8V 2,0Ah + AkH
Temperature range	-10°C to +40°C	–
Non-maintained mode	–	0°C to +35°C
Maintained mode	–	-5°C to +30°C
optional		
Multi-switch and monitoring module	DALI ELC MSÜ3 SET009 SET010	–
Self monitoring	–	SELF CHECK
Central monitoring	–	SAFELOG Line
Wireless monitoring	–	SAFELOG Wireless

* Optional accessory required

Ceiling mounting

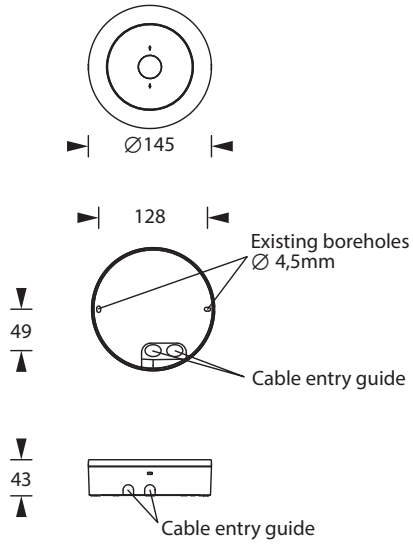

Technical changes reserved / 22.11.2026

Accessories

Wire guard
Pressure compensation valve
Cable assembly set

Lighting data and tables of luminaire distances (E = 1,25 lx)

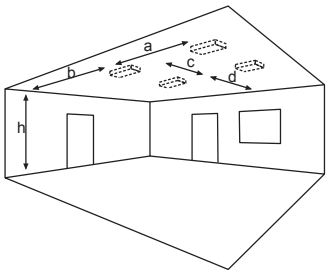

Ceiling mounting

Luminaires for central battery systems **escape route optics**

Distance table for plane emergency routes / distance data in meters

Illuminant: 3W LED

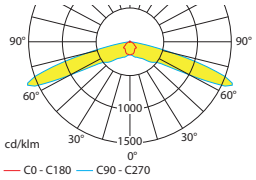

Luminous flux emergency / mains: 280lm

h	2.50	3.00	3.50	4.00	4.50	5.00	5.50	6.00	6.50	7.00	7.50	8.00
a	18.30	20.60	22.70	24.60	26.30	27.90	25.60	25.20	25.40	22.50	18.50	16.50
b	8.10	9.00	9.80	10.40	11.00	6.60	6.10	4.50	3.00	3.00	3.00	3.00
c	–	–	–	–	–	–	–	–	–	–	–	–
d	–	–	–	–	–	–	–	–	–	–	–	–

Self contained luminaires **escape route optics**

Distance table for plane emergency routes / distance data in meters

Illuminant: 3W LED

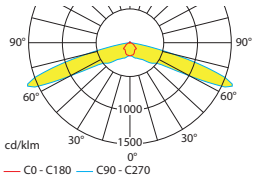

Luminous flux emergency / mains: 280lm/120lm – **Battery duration: 1h**

h	2.50	3.00	3.50	4.00	4.50	5.00	5.50	6.00	6.50	7.00	7.50	8.00
a	18.30	20.60	22.70	24.60	26.30	27.90	25.60	25.20	25.40	22.50	18.50	16.50
b	8.10	9.00	9.80	10.40	11.00	6.60	6.10	4.50	3.00	3.00	3.00	3.00
c	–	–	–	–	–	–	–	–	–	–	–	–
d	–	–	–	–	–	–	–	–	–	–	–	–

Self contained luminaires **escape route optics**

Distance table for plane emergency routes / distance data in meters

Illuminant: 3W LED

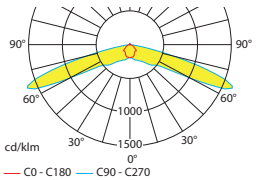

Luminous flux emergency / mains: 280lm/120lm – **Battery duration: 3h**

h	2.50	3.00	3.50	4.00	4.50	5.00	5.50	6.00	6.50	7.00	7.50	8.00
a	18.30	20.60	22.70	24.60	26.30	27.90	25.60	25.20	25.40	22.50	18.50	16.50
b	8.10	9.00	9.80	10.40	11.00	6.60	6.10	4.50	3.00	3.00	3.00	3.00
c	–	–	–	–	–	–	–	–	–	–	–	–
d	–	–	–	–	–	–	–	–	–	–	–	–

Self contained luminaires **escape route optics**

Distance table for plane emergency routes / distance data in meters

Illuminant: 3W LED

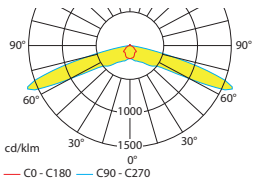

Luminous flux emergency / mains: 120lm/120lm – **Battery duration: 8h**

h	2.50	3.00	3.50	4.00	4.50	5.00
a	15.70	17.40	17.20	16.50	16.00	12.00
b	6.70	7.20	4.10	2.70	2.50	2.00
c	–	–	–	–	–	–
d	–	–	–	–	–	–

Technical changes reserved / 22.11.2026